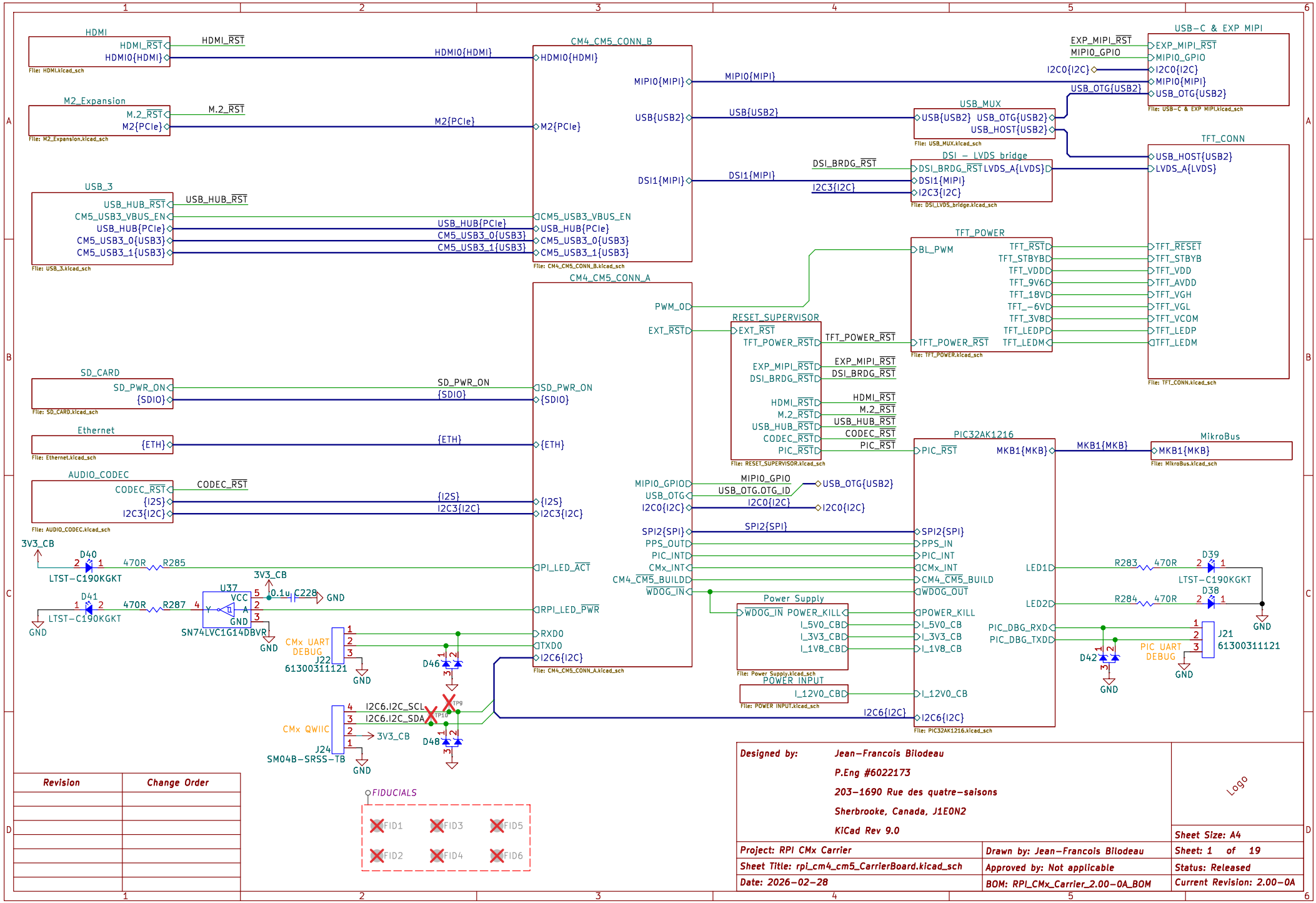
HDMI
HDMI_RST
HDMI0{HDMI}
File: HDMI.kicad_sch
M2_Expansion
M.2_RST
M2{PCIe}
File: M2_Expansion.kicad_sch
USB_3
USB_HUB_RST
CM5_USB3_VBUS_EN
USB_HUB{PCIe}
CM5_USB3_0{USB3}
CM5_USB3_1{USB3}
File: USB_3.kicad_sch
SD_CARD
SD_PWR_ON
{SDIO}
File: SD_CARD.kicad_sch
Ethernet
{ETH}
File: Ethernet.kicad_sch
AUDIO_CODEC
CODEC_RST
{I2S}
I2C3{I2C}
File: AUDIO_CODEC.kicad_sch
CM4_CM5_CONN_B
MIPI0{MIPI}
USB{USB2}
DSI1{MIPI}
File: CM4_CM5_CONN_B.kicad_sch
CM4_CM5_CONN_A
PWM_0
EXT_RST
PI_LED_ACT
RPI_LED_PWR
RXD0
TXD0
I2C6{I2C}
MIPI0_GPIO
USB_OTG
SPI2{SPI}
PPS_OUT
PIC_INT
CMx_INT
CM4_CM5_BUILD
WDOG_IN
File: CM4_CM5_CONN_A.kicad_sch
USB-C & EXP MIPI
EXP_MIPI_RST
File: USB-C & EXP MIPI.kicad_sch
USB_MUX
USB_OTG{USB2}
USB_HOST{USB2}
File: USB_MUX.kicad_sch
DSI – LVDS bridge
DSI_BRDG_RST
LVDS_A{LVDS}
File: DSI_LVDS_bridge.kicad_sch
TFT_CONN
File: TFT_CONN.kicad_sch
TFT_POWER
BL_PWM
TFT_RST
TFT_STBYB
TFT_VDD
TFT_9V6
TFT_18V
TFT_–6V
TFT_3V8
TFT_LEDP
TFT_LEDM
File: TFT_POWER.kicad_sch
RESET_SUPERVISOR
TFT_POWER_RST
File: RESET_SUPERVISOR.kicad_sch
PIC32AK1216
LED1
LED2
PIC_DBG_RXD
PIC_DBG_TXD
I_5V0_CB
I_3V3_CB
I_1V8_CB
I_12V0_CB
File: PIC32AK1216.kicad_sch
MikroBus
MKB1{MKB}
File: MikroBus.kicad_sch
Power Supply
POWER_KILL
File: Power Supply.kicad_sch
POWER INPUT
File: POWER INPUT.kicad_sch
3V3_CB
D40
LTST-C190KGKT
470R
R285
D41
R287
U37
SN74LVC1G14DBVR
C228
0.1u
GND
CMx UART DEBUG
J22
61300311121
D46
CMx QWIIC
J24
SM04B-SRSS-TB
I2C6.I2C_SCL
I2C6.I2C_SDA
D48
R283
R284
D39
D38
D42
PIC UART DEBUG
J21
FIDUCIALS
FID1
FID2
FID3
FID4
FID5
FID6
Revision
Change Order
Designed by: Jean-Francois Bilodeau
P.Eng #6022173
203-1690 Rue des quatre-saisons
Sherbrooke, Canada, J1E0N2
KiCad Rev 9.0
Logo
Project: RPI CMx Carrier
Drawn by: Jean-Francois Bilodeau
Sheet Size: A4
Sheet Title: rpi_cm4_cm5_CarrierBoard.kicad_sch
Approved by: Not applicable
Sheet: 1 of 19
Status: Released
Date: 2026-02-28
BOM: RPI_CMx_Carrier_2.00-0A_BOM
Current Revision: 2.00-0A

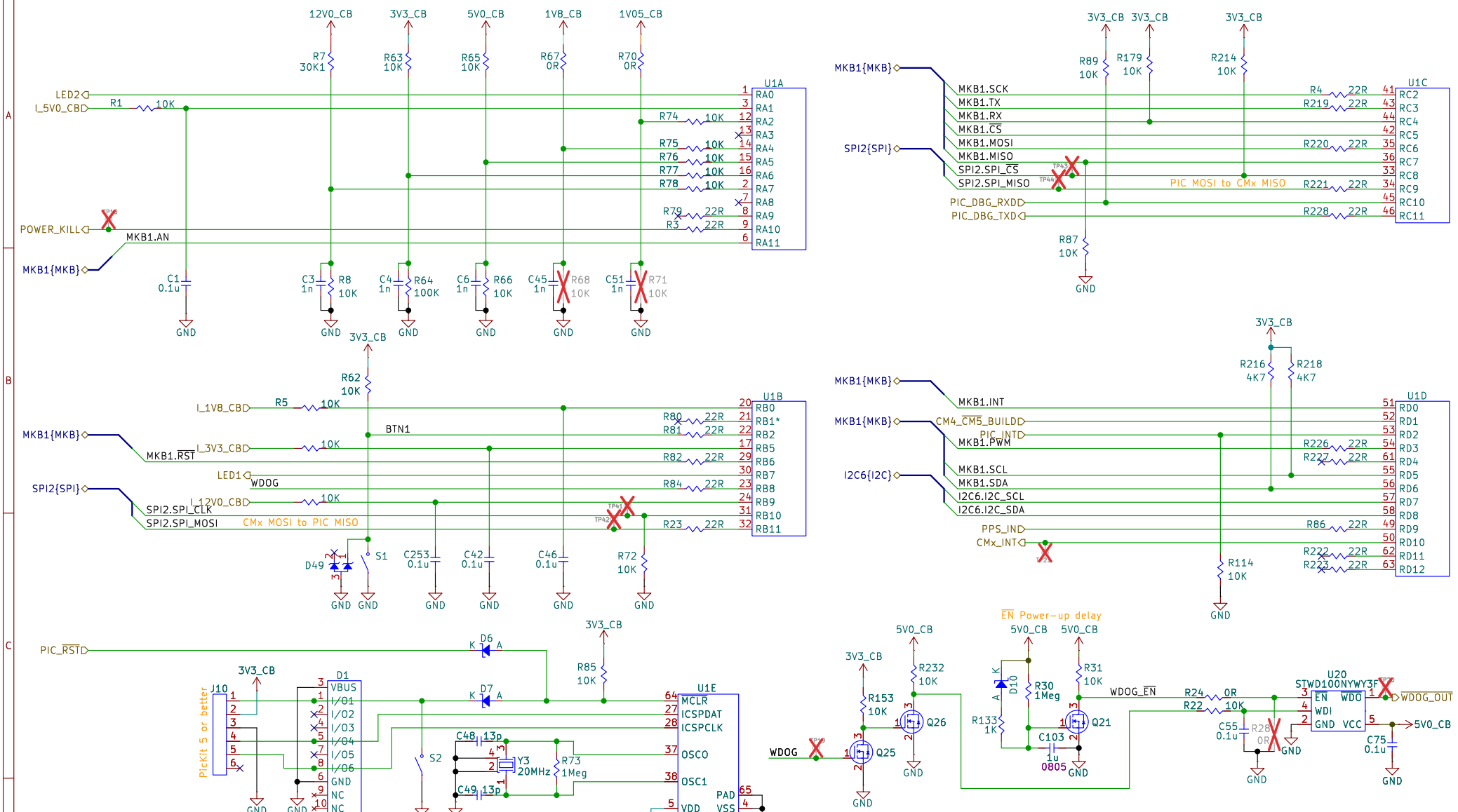

Resistors are 1% 1/16W 0402 unless otherwise noted
Capacitors are 10% 50V X7R 0402 unless otherwise noted

Revision	Change Order

Designed by: Jean-Francois Bilodeau P.Eng #6022173 203-1690 Rue des quatre-saisons Sherbrooke, Canada, J1E0N2 KiCad Rev 9.0		Logo
Project: RPI CMx Carrier	Drawn by: Jean-Francois Bilodeau	Sheet Size: A4
Sheet Title: PIC32AK1216.kicad_sch	Approved by: Not applicable	Sheet: 2 of 19
Date: 2026-02-28	BOM: RPI_CMx_Carrier_2.00-0A_BOM	Status: Released
		Current Revision: 2.00-0A

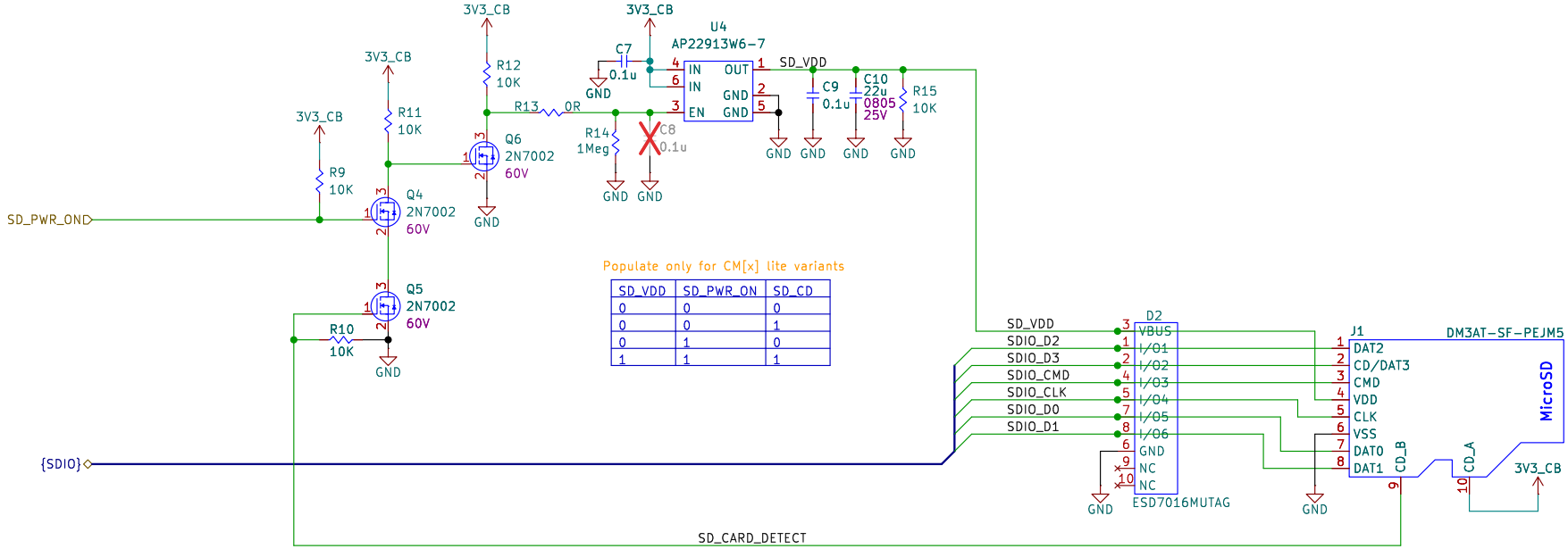

Resistors are 1% 1/16W 0402 unless otherwise noted
Capacitors are 10% 50V X7R 0402 unless otherwise noted

Revision	Change Order

Designed by: Jean-Francois Bilodeau P.Eng #6022173 203-1690 Rue des quatre-saisons Sherbrooke, Canada, J1E0N2 KiCad Rev 9.0		Logo
Project: RPI CMx Carrier	Drawn by: Jean-Francois Bilodeau	Sheet Size: A4
Sheet Title: SD_CARD.kicad_sch	Approved by: Not applicable	Sheet: 3 of 19
Date: 2026-02-28	BOM: RPI_CMx_Carrier_2.00-0A_BOM	Status: Released
		Current Revision: 2.00-0A

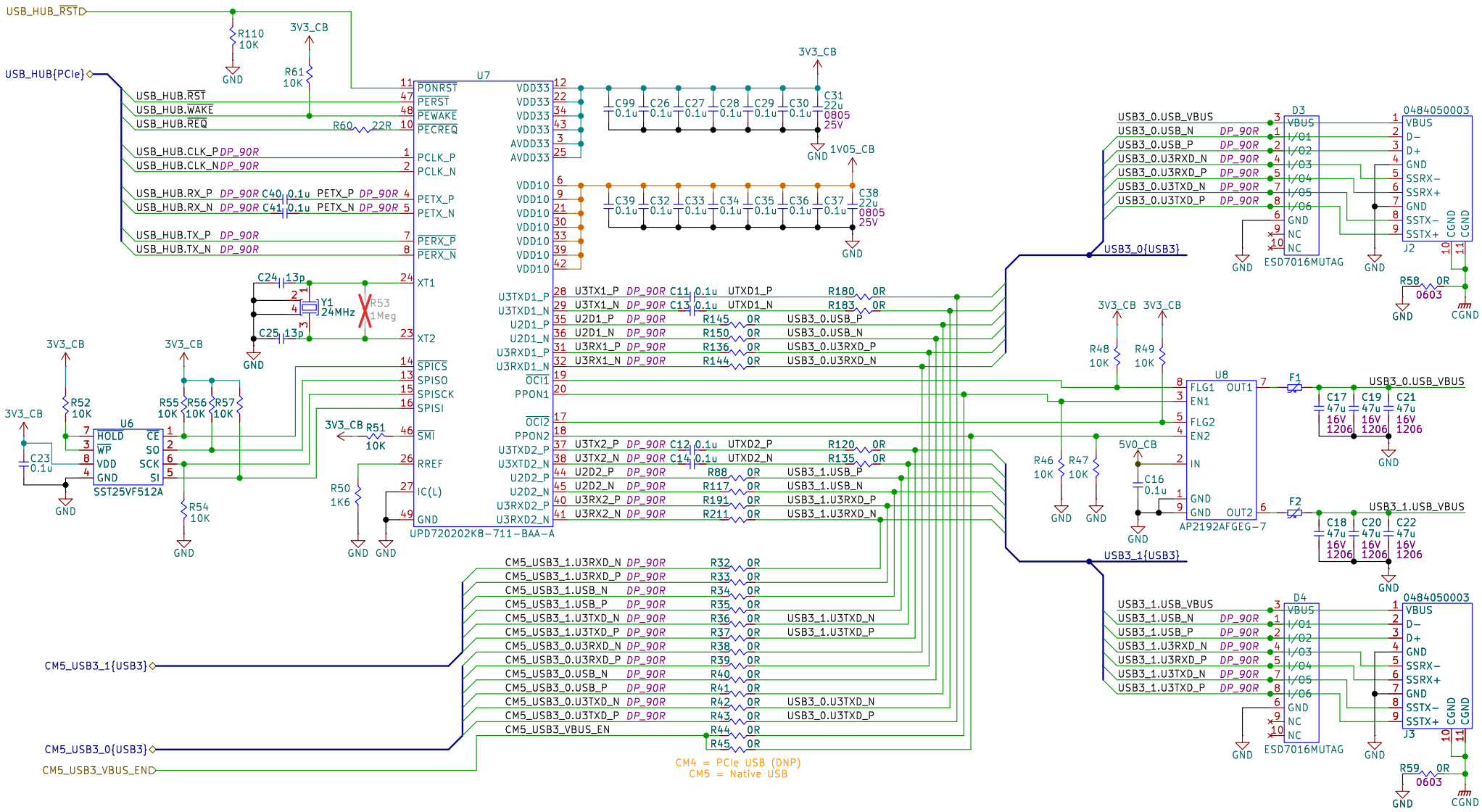

Resistors are 1% 1/16W 0402 unless otherwise noted
Capacitors are 10% 50V X7R 0402 unless otherwise noted

Revision	Change Order

Designed by: Jean-Francois Bilodeau P.Eng #6022173 203-1690 Rue des quatre-saisons Sherbrooke, Canada, J1E0N2 KiCad Rev 9.0		Logo Sheet Size: A4
Project: RPI CMx Carrier	Drawn by: Jean-Francois Bilodeau	Sheet: 4 of 19
Sheet Title: USB_3.kicad_sch	Approved by: Not applicable	Status: Released
Date: 2026-02-28	BOM: RPI_CMx_Carrier_2.00-0A_BOM	Current Revision: 2.00-0A

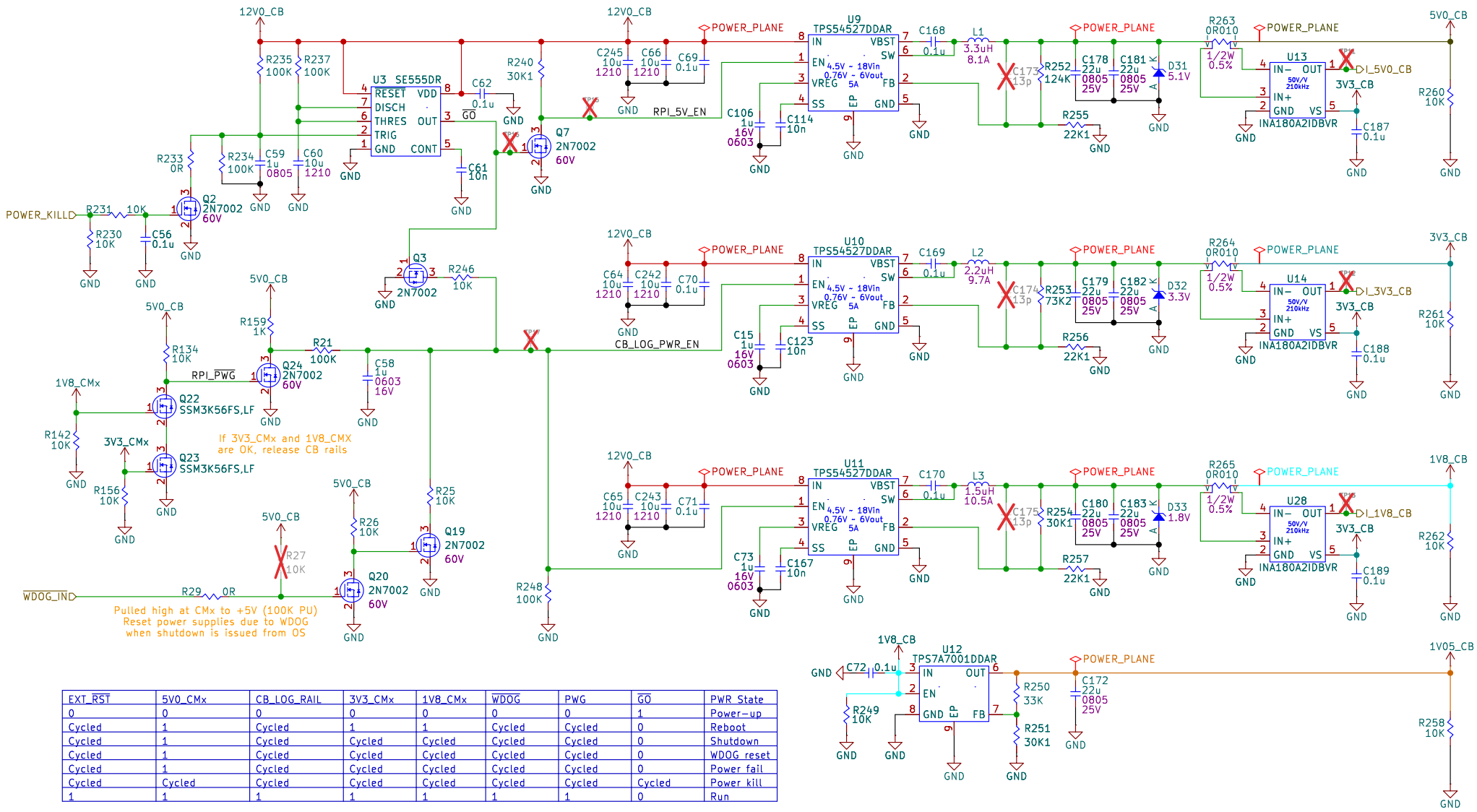

EXT_$\overline{RST}$	5V0_CMx	CB_LOG_RAIL	3V3_CMx	1V8_CMx	$\overline{WDOG}$	PWG	$\overline{GO}$	PWR State
0	0	0	0	0	0	0	1	Power-up
Cycled	1	Cycled	1	1	Cycled	Cycled	0	Reboot
Cycled	1	Cycled	Cycled	Cycled	Cycled	Cycled	0	Shutdown
Cycled	1	Cycled	Cycled	Cycled	Cycled	Cycled	0	WDOG reset
Cycled	1	Cycled	Cycled	Cycled	Cycled	Cycled	0	Power fail
Cycled	Cycled	Cycled	Cycled	Cycled	Cycled	Cycled	Cycled	Power kill
1	1	1	1	1	1	1	0	Run

Power rail	12V0_CB	5V0_CB	3V3_CB	1V8_CB	1V05_CB
V(min)	11.60V	4.75V	3.135V	1.71V	0.9975V
V(nom)	12.00V	5.00V	3.30V	1.80V	1.05V
V(max)	12.40V	5.25V	3.465V	1.89V	1.1025V
I(max)	2.6A	3A	3.5A	0.8A	0.6A
Efficiency	N/A	90%	90%	85%	58%

Power rail	Voltage monitor
12V0_CB	2.99V ± 5%
5V0_CB	2.50V ± 5%
3V3_CB	3.00V ± 5%
1V8_CB	1.80V ± 5%
1V05_CB	1.05V ± 5%

Current sense	Output voltage
1A	0.50V ± 5%
2A	1.00V ± 5%
3A	1.50V ± 5%
4A	2.00V ± 5%
5A	2.50V ± 5%

Resistors are 1% 1/16W 0402 unless otherwise noted
Capacitors are 10% 50V X7R 0402 unless otherwise noted

Revision	Change Order

Designed by: Jean-Francois Bilodeau
P.Eng #6022173
203-1690 Rue des quatre-saisons
Sherbrooke, Canada, J1E0N2
KiCad Rev 9.0

Logo

Sheet Size: A4

Project: RPI CMx Carrier	Drawn by: Jean-Francois Bilodeau	Sheet: 5 of 19
Sheet Title: Power Supply.kicad_sch	Approved by: Not applicable	Status: Released
Date: 2026-02-28	BOM: RPI_CMx_Carrier_2.00-0A_BOM	Current Revision: 2.00-0A

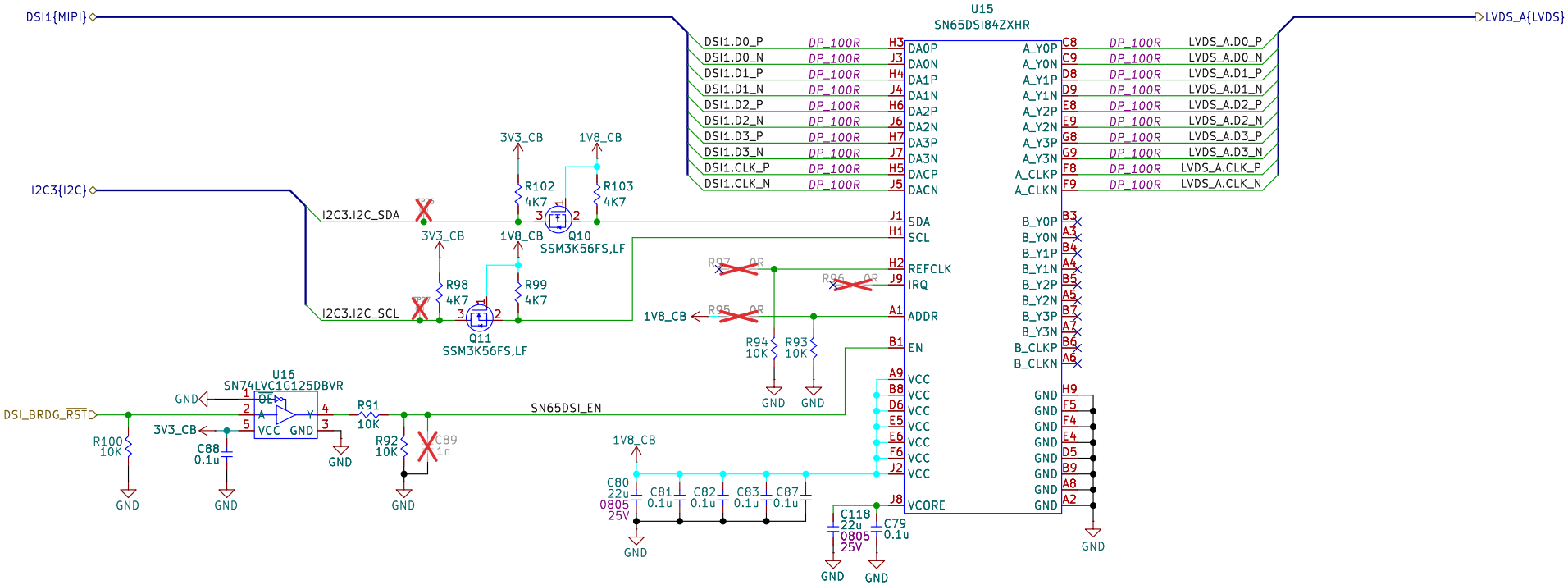

Resistors are 1% 1/16W 0402 unless otherwise noted
Capacitors are 10% 50V X7R 0402 unless otherwise noted

Revision	Change Order

Designed by: Jean-Francois Bilodeau P.Eng #6022173 203-1690 Rue des quatre-saisons Sherbrooke, Canada, J1E0N2 KiCad Rev 9.0		Logo
Project: RPI CMx Carrier	Drawn by: Jean-Francois Bilodeau	Sheet Size: A4
Sheet Title: DSI_LVDS_bridge.kicad_sch	Approved by: Not applicable	Sheet: 6 of 19
Date: 2026-02-28	BOM: RPI_CMx_Carrier_2.00-0A_BOM	Status: Released
		Current Revision: 2.00-0A

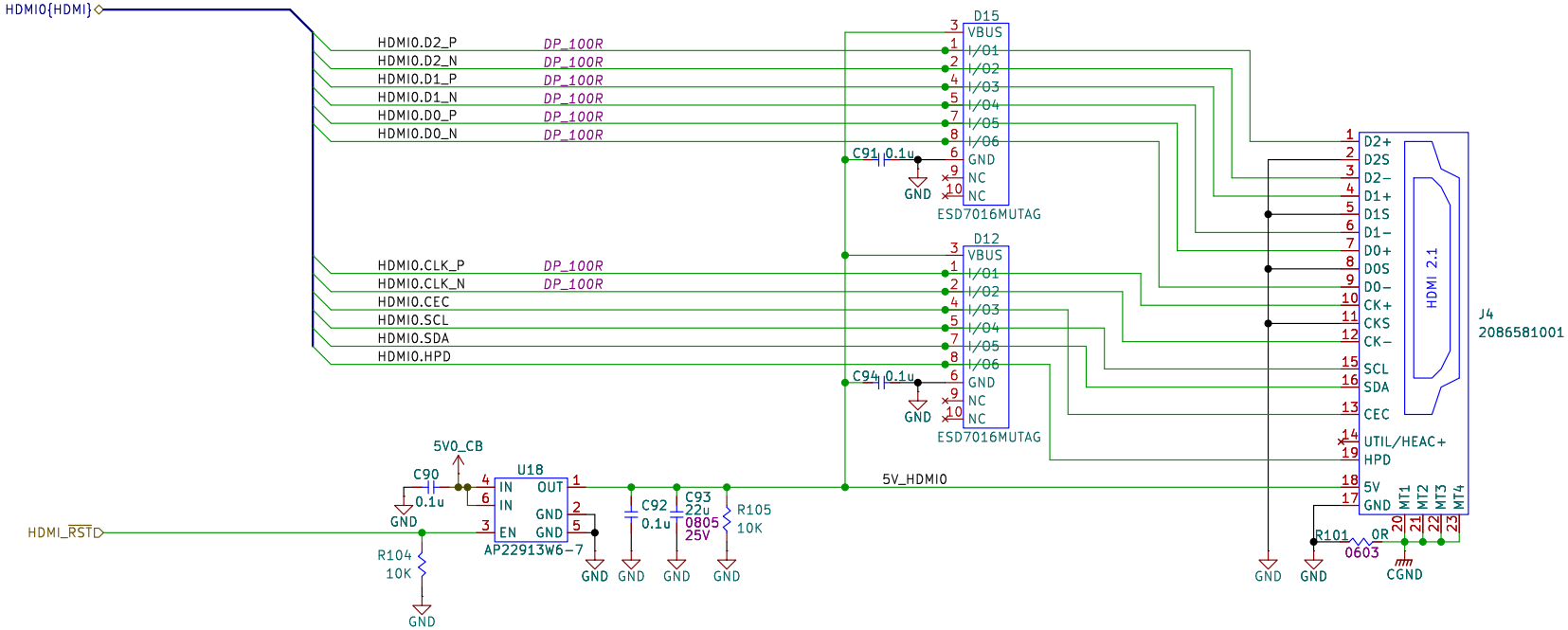

Resistors are 1% 1/16W 0402 unless otherwise noted
Capacitors are 10% 50V X7R 0402 unless otherwise noted

Revision	Change Order

Designed by: Jean-Francois Bilodeau P.Eng #6022173 203-1690 Rue des quatre-saisons Sherbrooke, Canada, J1E0N2 KiCad Rev 9.0		Logo
Project: RPI CMx Carrier	Drawn by: Jean-Francois Bilodeau	Sheet Size: A4
Sheet Title: HDMI.kicad_sch	Approved by: Not applicable	Sheet: 7 of 19
Date: 2026-02-28	BOM: RPI_CMx_Carrier_2.00-0A_BOM	Status: Released
		Current Revision: 2.00-0A

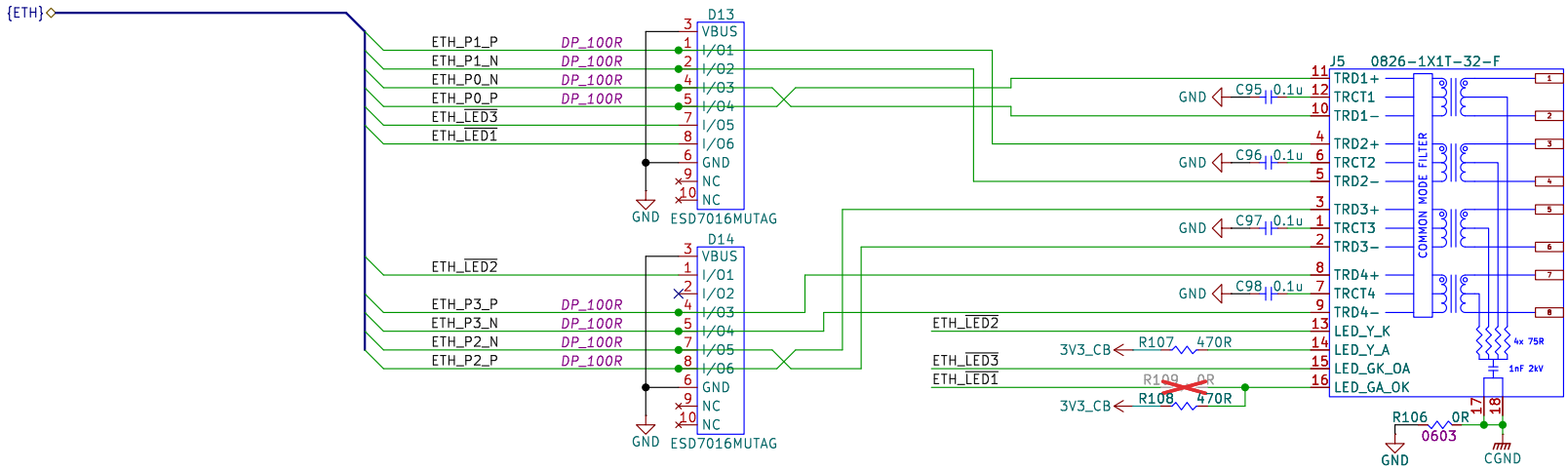

Resistors are 1% 1/16W 0402 unless otherwise noted
Capacitors are 10% 50V X7R 0402 unless otherwise noted

Revision	Change Order

Designed by: Jean-Francois Bilodeau P.Eng #6022173 203-1690 Rue des quatre-saisons Sherbrooke, Canada, J1E0N2 KiCad Rev 9.0		Logo
Project: RPI CMx Carrier	Drawn by: Jean-Francois Bilodeau	Sheet Size: A4
Sheet Title: Ethernet.kicad_sch	Approved by: Not applicable	Sheet: 8 of 19
Date: 2026-02-28	BOM: RPI_CMx_Carrier_2.00-0A_BOM	Status: Released
		Current Revision: 2.00-0A

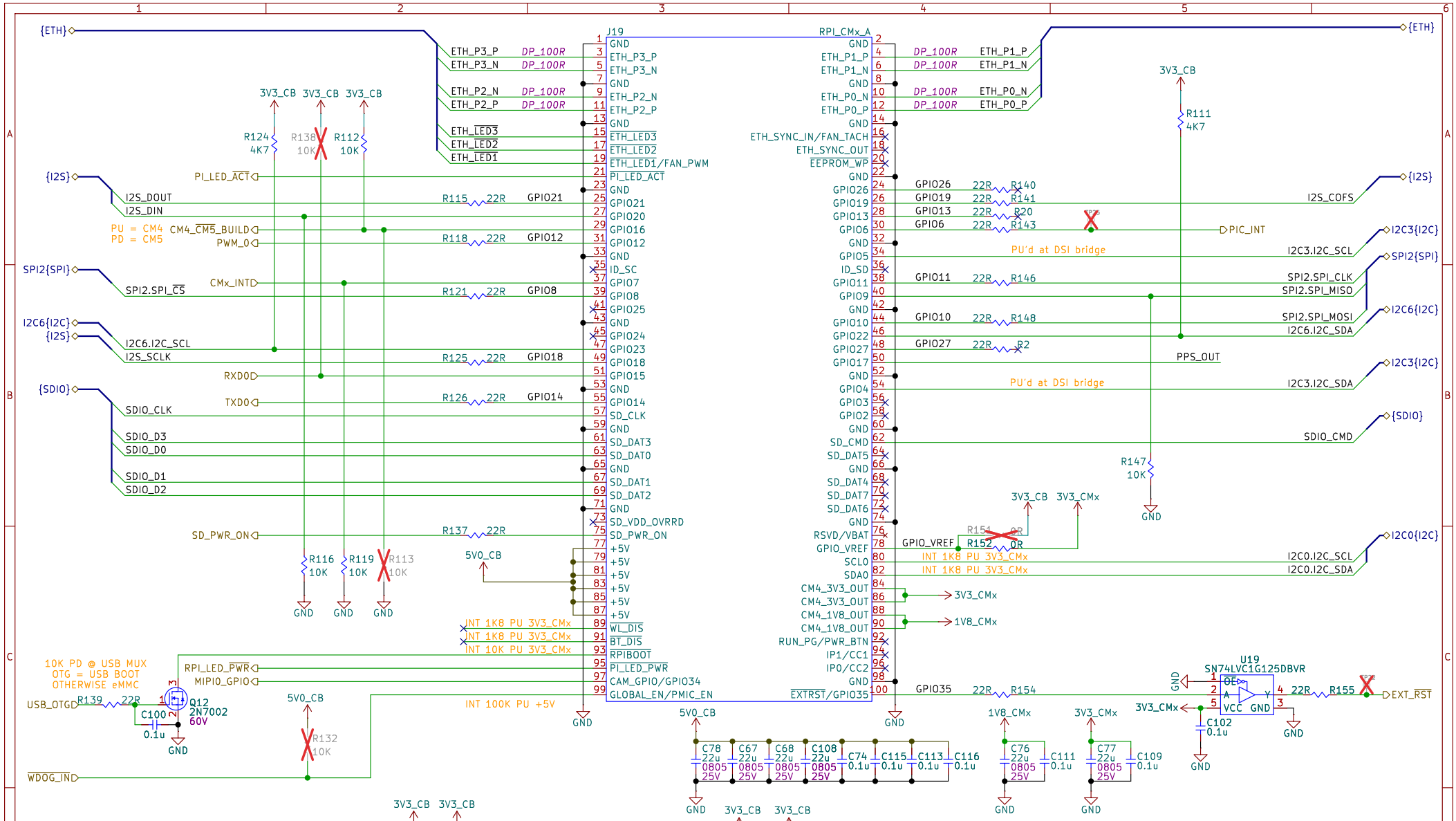

Revision	Change Order

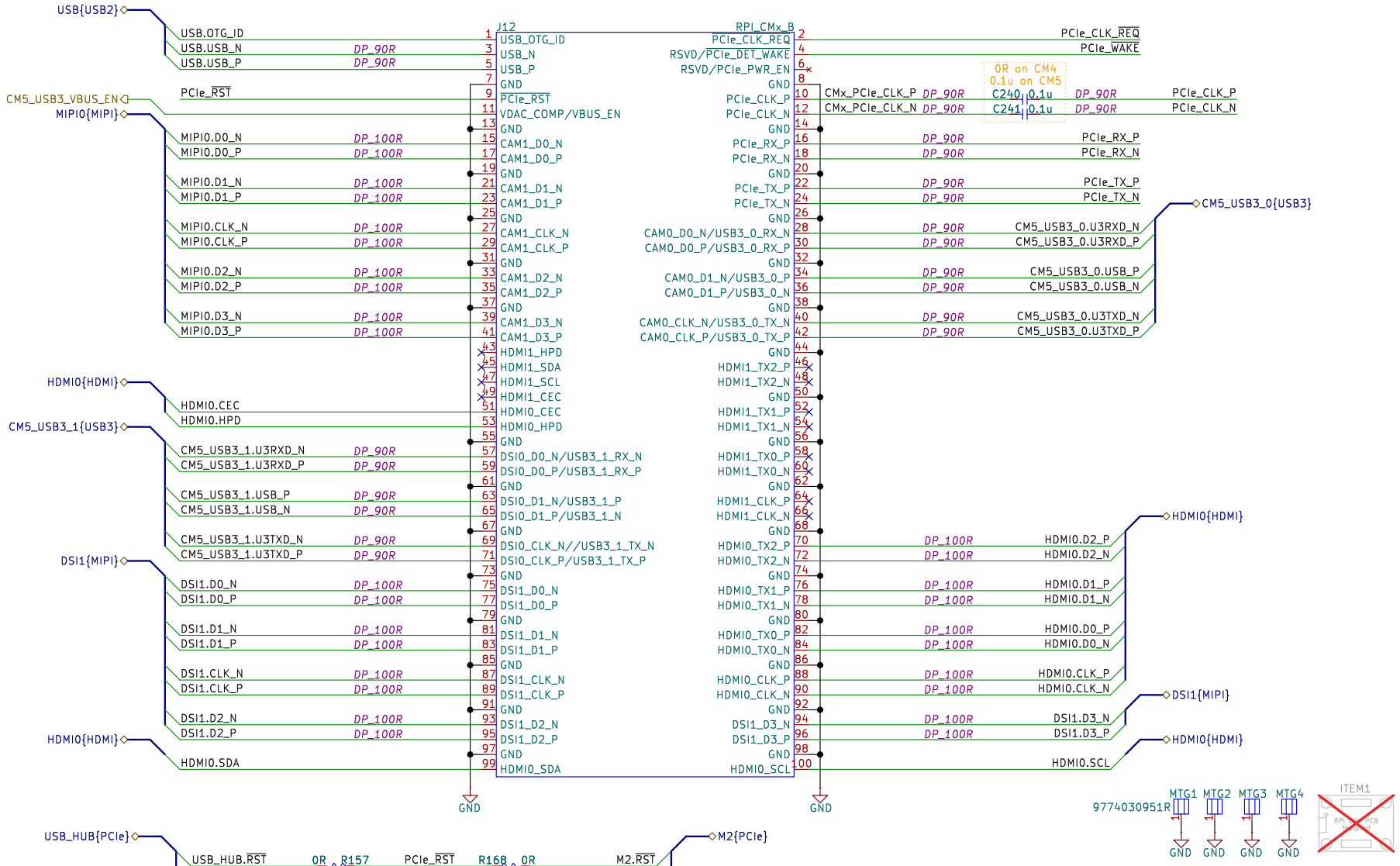

Resistors are 1% 1/16W 0402 unless otherwise noted
Capacitors are 10% 50V X7R 0402 unless otherwise noted

Revision	Change Order

Designed by: Jean-Francois Bilodeau P.Eng #6022173 203-1690 Rue des quatre-saisons Sherbrooke, Canada, J1E0N2 KiCad Rev 9.0		Logo
Project: RPI CMx Carrier	Drawn by: Jean-Francois Bilodeau	Sheet Size: A4
Sheet Title: CM4_CM5_CONN_B.kicad_sch	Approved by: Not applicable	Sheet: 10 of 19
Date: 2026-02-28	BOM: RPI_CMx_Carrier_2.00-0A_BOM	Status: Released Current Revision: 2.00-0A

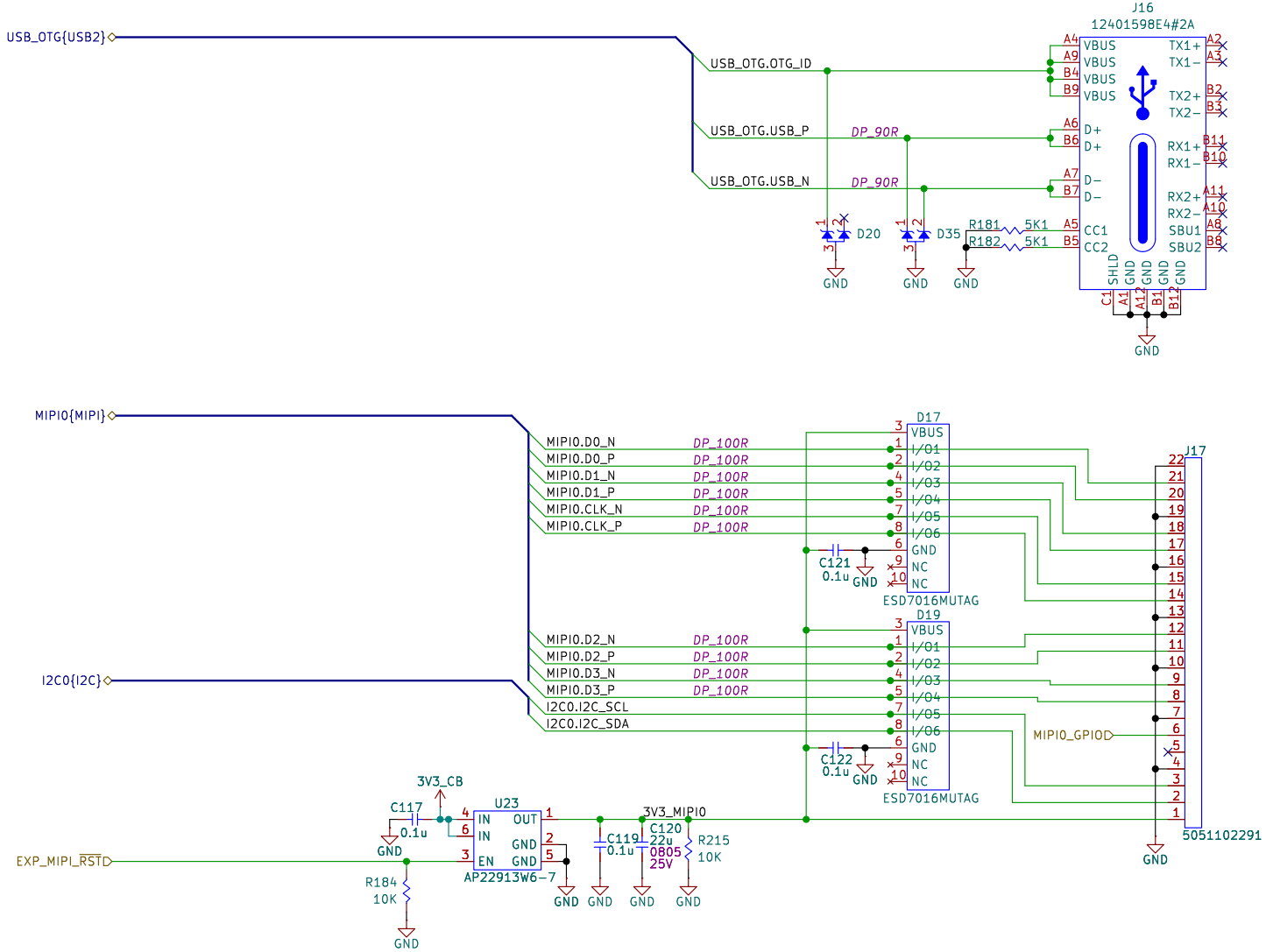

Resistors are 1% 1/16W 0402 unless otherwise noted
Capacitors are 10% 50V X7R 0402 unless otherwise noted

Revision	Change Order

Designed by: Jean−Francois Bilodeau P.Eng #6022173 203−1690 Rue des quatre−saisons Sherbrooke, Canada, J1E0N2 KiCad Rev 9.0		Logo
Project: RPI CMx Carrier	Drawn by: Jean−Francois Bilodeau	Sheet Size: A4
Sheet Title: USB−C & EXP MIPI.kicad_sch	Approved by: Not applicable	Sheet: 11 of 19
Date: 2026−02−28	BOM: RPI_CMx_Carrier_2.00−0A_BOM	Status: Released
		Current Revision: 2.00−0A

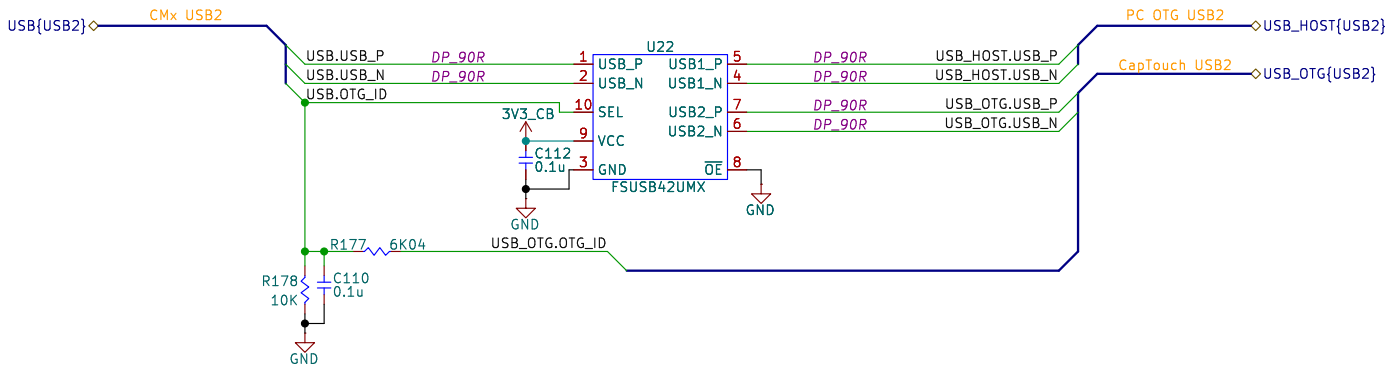

Resistors are 1% 1/16W 0402 unless otherwise noted
Capacitors are 10% 50V X7R 0402 unless otherwise noted

Revision	Change Order

Designed by: Jean-Francois Bilodeau P.Eng #6022173 203-1690 Rue des quatre-saisons Sherbrooke, Canada, J1E0N2 KiCad Rev 9.0		Logo Sheet Size: A4
Project: RPI CMx Carrier	Drawn by: Jean-Francois Bilodeau	Sheet: 12 of 19
Sheet Title: USB_MUX.kicad_sch	Approved by: Not applicable	Status: Released
Date: 2026-02-28	BOM: RPI_CMx_Carrier_2.00-0A_BOM	Current Revision: 2.00-0A

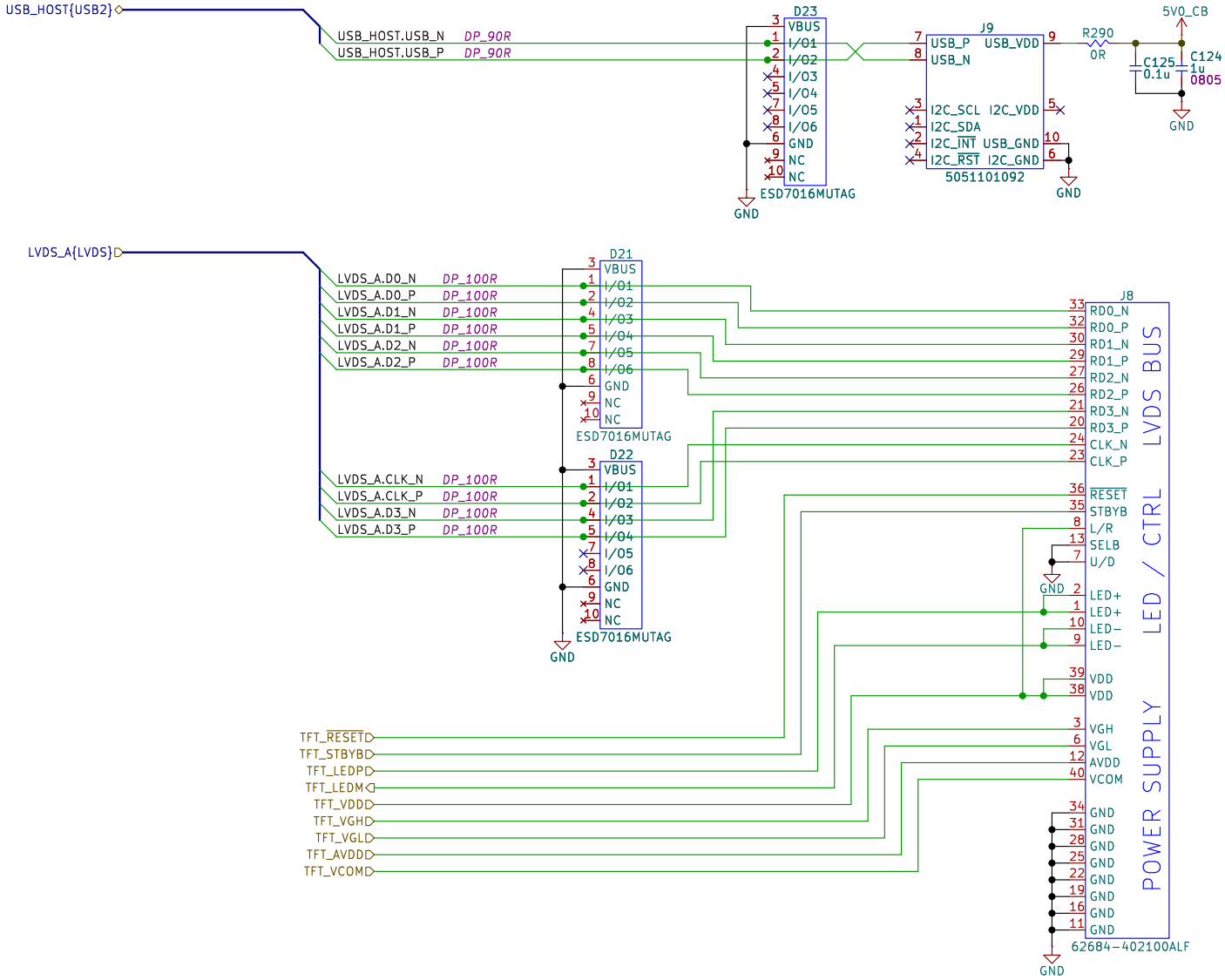

Resistors are 1% 1/16W 0402 unless otherwise noted
Capacitors are 10% 50V X7R 0402 unless otherwise noted

Revision	Change Order

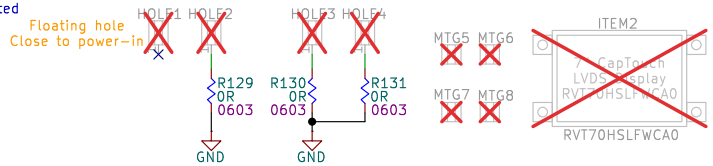

Designed by: Jean−Francois Bilodeau P.Eng #6022173 203−1690 Rue des quatre−saisons Sherbrooke, Canada, J1E0N2 KiCad Rev 9.0		Logo
Project: RPI CMx Carrier	Drawn by: Jean−Francois Bilodeau	Sheet Size: A4
Sheet Title: TFT_CONN.kicad_sch	Approved by: Not applicable	Sheet: 13 of 19
Date: 2026−02−28	BOM: RPI_CMx_Carrier_2.00−0A_BOM	Status: Released
		Current Revision: 2.00−0A

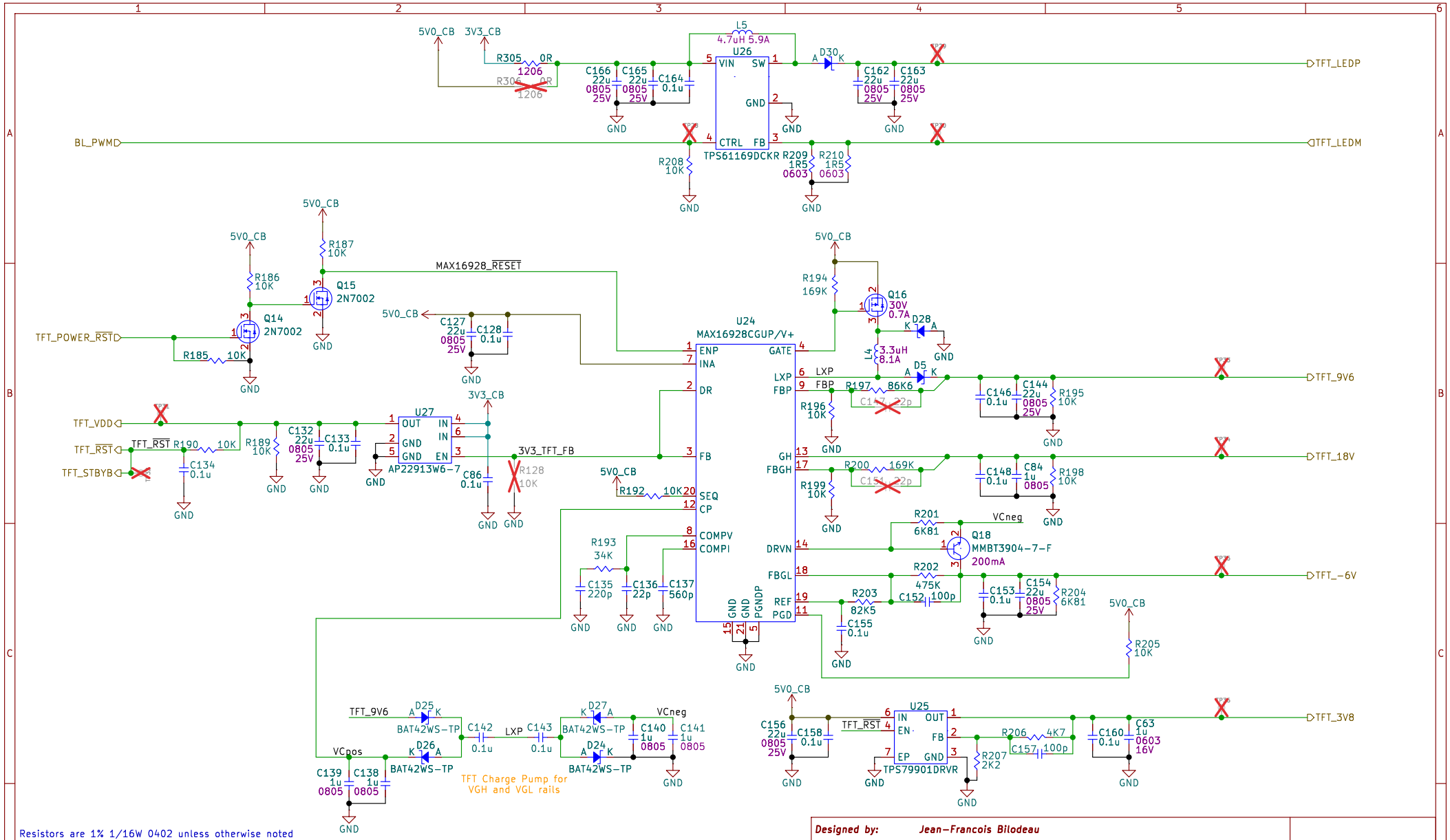

Resistors are 1% 1/16W 0402 unless otherwise noted
Capacitors are 10% 50V X7R 0402 unless otherwise noted

Revision	Change Order

Designed by: Jean-Francois Bilodeau P.Eng #6022173 203-1690 Rue des quatre-saisons Sherbrooke, Canada, J1E0N2 KiCad Rev 9.0		Logo
Project: RPI CMx Carrier	Drawn by: Jean-Francois Bilodeau	Sheet Size: A4
Sheet Title: TFT_POWER.kicad_sch	Approved by: Not applicable	Sheet: 14 of 19
Date: 2026-02-28	BOM: RPI_CMx_Carrier_2.00-0A_BOM	Status: Released
		Current Revision: 2.00-0A

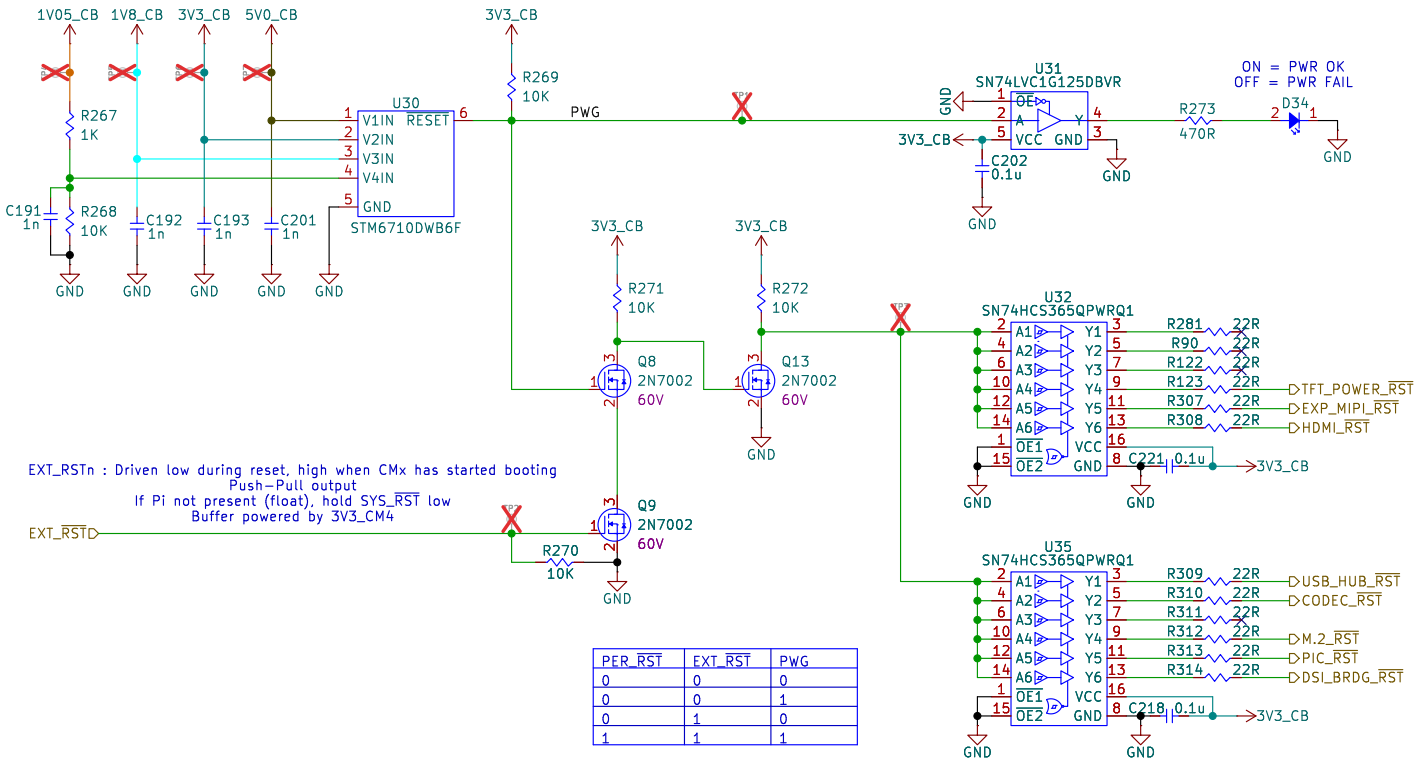

PER_RST	EXT_RST	PWG
0	0	0
0	0	1
0	1	0
1	1	1

Resistors are 1% 1/16W 0402 unless otherwise noted
Capacitors are 10% 50V X7R 0402 unless otherwise noted

Revision	Change Order

Designed by: Jean-Francois Bilodeau
P.Eng #6022173
203-1690 Rue des quatre-saisons
Sherbrooke, Canada, J1E0N2
KiCad Rev 9.0

Logo

Project: RPI CMx Carrier	Drawn by: Jean-Francois Bilodeau	Sheet Size: A4
Sheet Title: RESET_SUPERVISOR.kicad_sch	Approved by: Not applicable	Sheet: 15 of 19
Date: 2026-02-28	BOM: RPI_CMx_Carrier_2.00-0A_BOM	Status: Released
		Current Revision: 2.00-0A

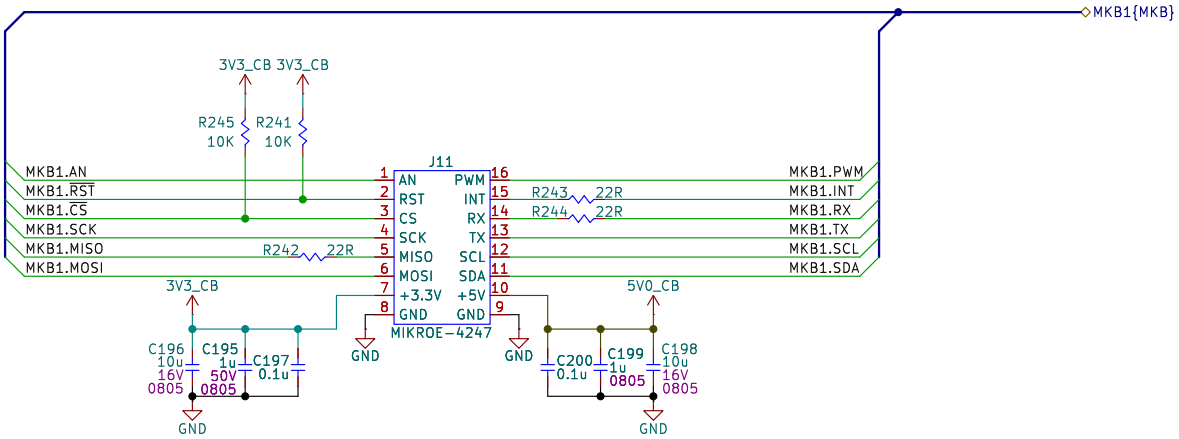

Resistors are 1% 1/16W 0402 unless otherwise noted
Capacitors are 10% 50V X7R 0402 unless otherwise noted

Revision	Change Order

Designed by: Jean-Francois Bilodeau P.Eng #6022173 203-1690 Rue des quatre-saisons Sherbrooke, Canada, J1E0N2 KiCad Rev 9.0		Logo Sheet Size: A4
Project: RPI CMx Carrier	Drawn by: Jean-Francois Bilodeau	Sheet: 16 of 19
Sheet Title: MikroBus.kicad_sch	Approved by: Not applicable	Status: Released
Date: 2026-02-28	BOM: RPI_CMx_Carrier_2.00-0A_BOM	Current Revision: 2.00-0A

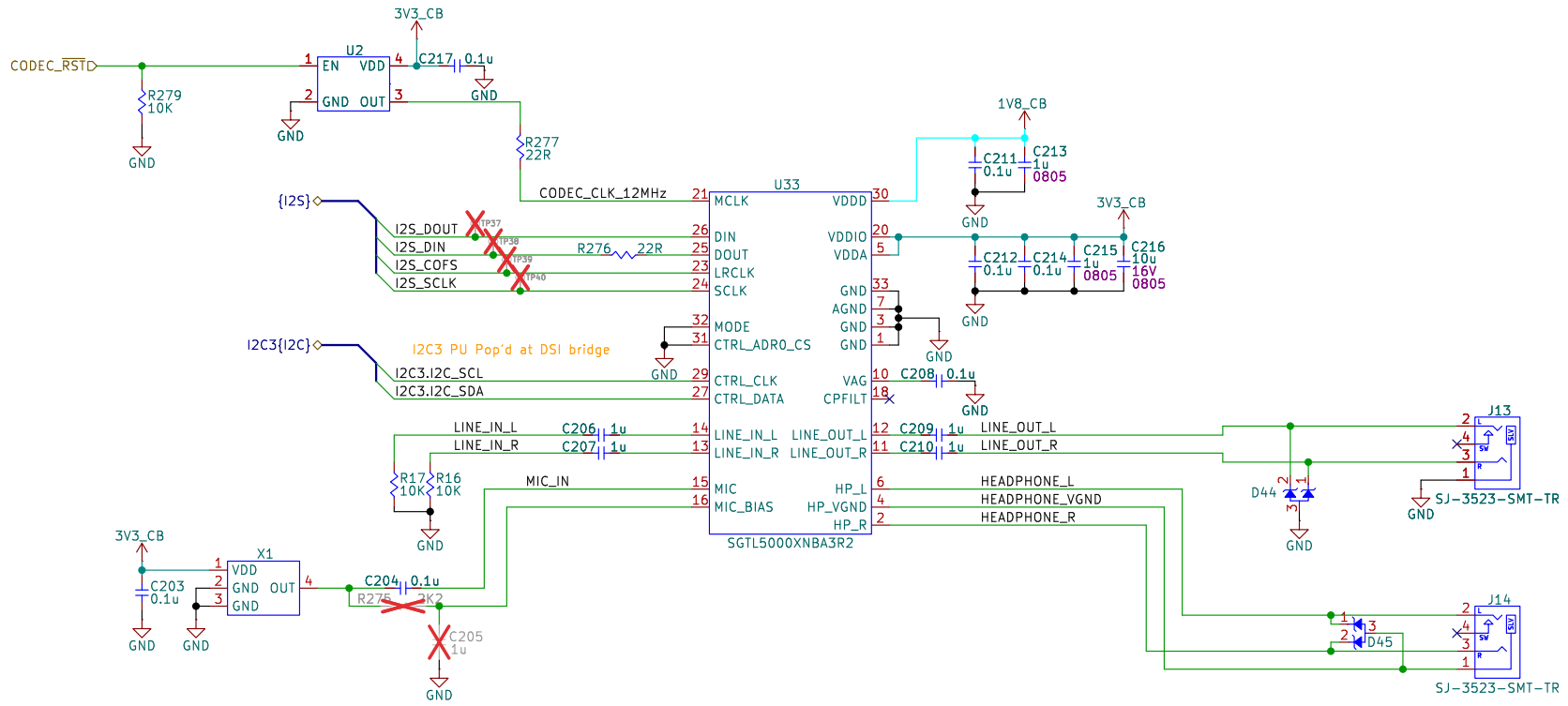

Resistors are 1% 1/16W 0402 unless otherwise noted
Capacitors are 10% 50V X7R 0402 unless otherwise noted

Revision	Change Order

Designed by: Jean-Francois Bilodeau P.Eng #6022173 203-1690 Rue des quatre-saisons Sherbrooke, Canada, J1E0N2 KiCad Rev 9.0		Logo
Project: RPI CMx Carrier	Drawn by: Jean-Francois Bilodeau	Sheet Size: A4
Sheet Title: AUDIO_CODEC.kicad_sch	Approved by: Not applicable	Sheet: 17 of 19
Date: 2026-02-28	BOM: RPI_CMx_Carrier_2.00-0A_BOM	Status: Released
		Current Revision: 2.00-0A

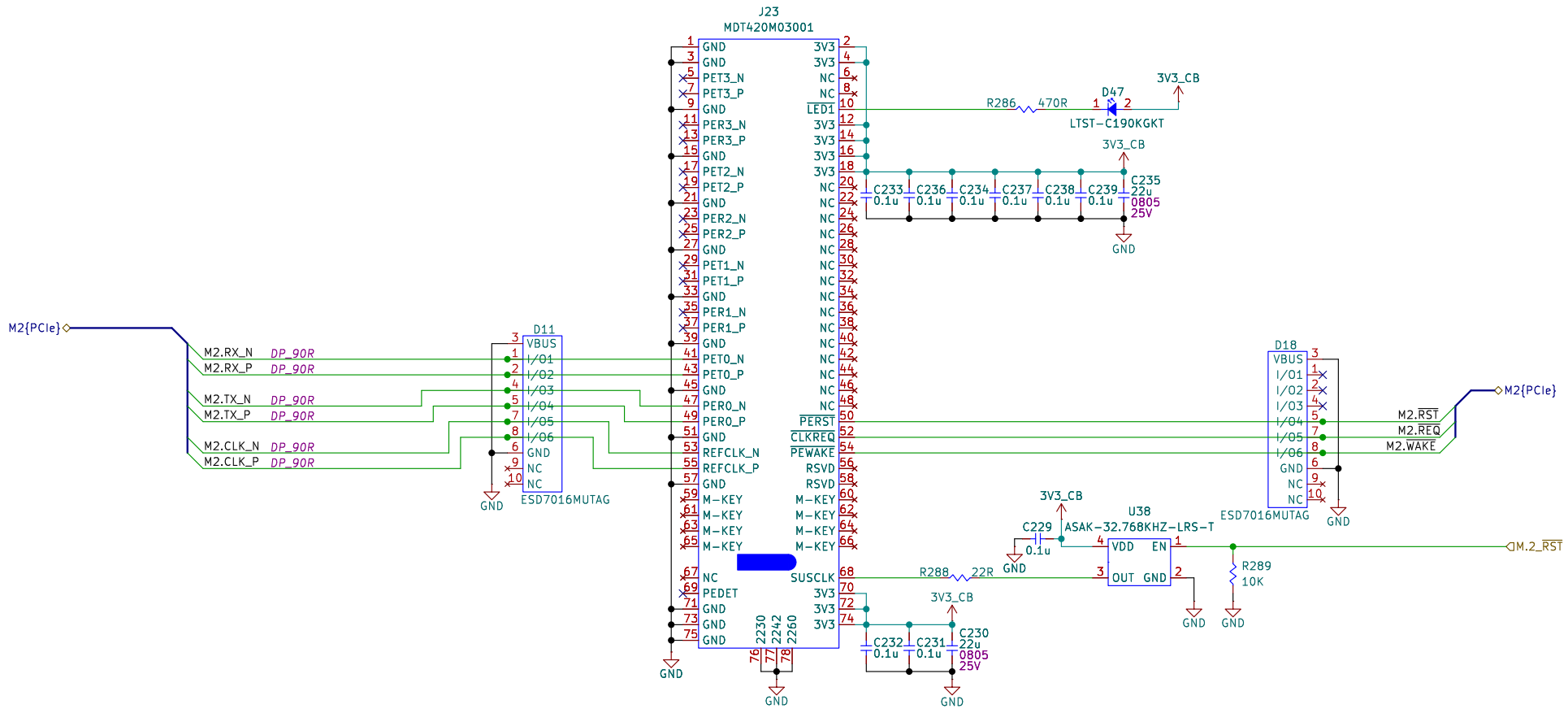

Resistors are 1% 1/16W 0402 unless otherwise noted
Capacitors are 10% 50V X7R 0402 unless otherwise noted

MTG9
9774025243R
GND

Revision	Change Order

Designed by: Jean-Francois Bilodeau
P.Eng #6022173
203-1690 Rue des quatre-saisons
Sherbrooke, Canada, J1E0N2
KiCad Rev 9.0

Logo

Project: RPI CMx Carrier	Drawn by: Jean-Francois Bilodeau	Sheet Size: A4
Sheet Title: M2_Expansion.kicad_sch	Approved by: Not applicable	Sheet: 19 of 19
Date: 2026-02-28	BOM: RPI_CMx_Carrier_2.00-0A_BOM	Status: Released
		Current Revision: 2.00-0A

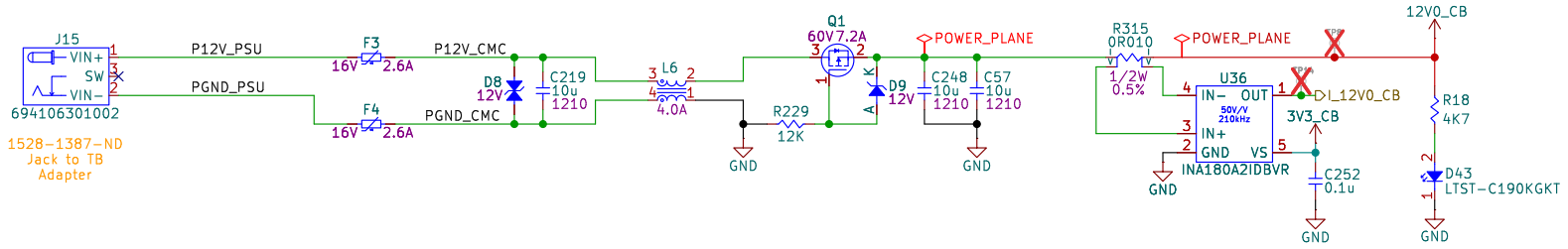

Resistors are 1% 1/16W 0402 unless otherwise noted
Capacitors are 10% 50V X7R 0402 unless otherwise noted

Revision	Change Order

Designed by: Jean−Francois Bilodeau P.Eng #6022173 203−1690 Rue des quatre−saisons Sherbrooke, Canada, J1E0N2 KiCad Rev 9.0		Logo
Project: RPI CMx Carrier	Drawn by: Jean−Francois Bilodeau	Sheet Size: A4
Sheet Title: POWER INPUT.kicad_sch	Approved by: Not applicable	Sheet: 20 of 19
Date: 2026−02−28	BOM: RPI_CMx_Carrier_2.00−0A_BOM	Status: Released
		Current Revision: 2.00−0A